PROPRIETARY INFORMATION
COMPANY CONFIDENTIAL

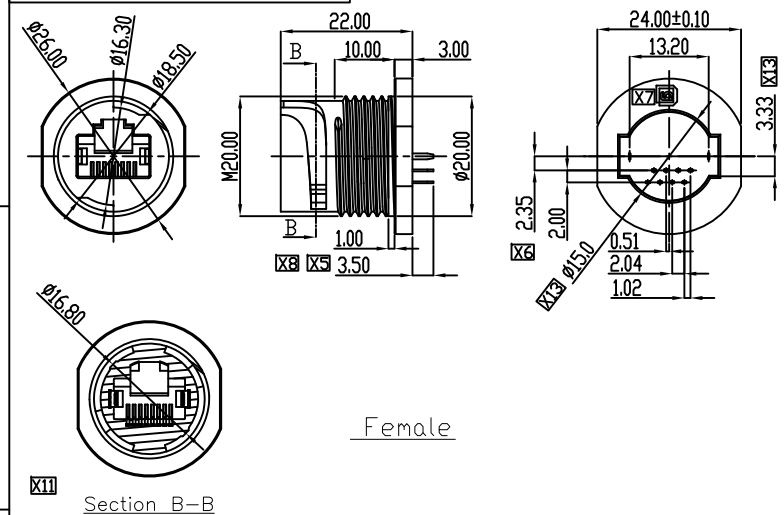

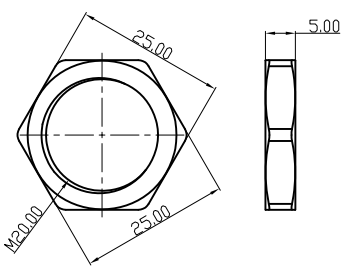

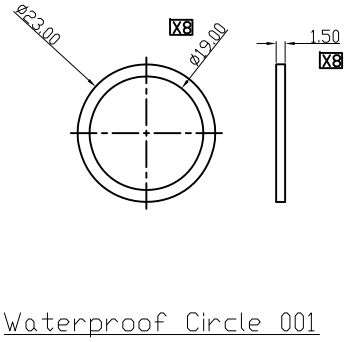

REV.	ECN. NO.	DESCRIPTION	ENG	DATE
X1		INITIAL	Knight	06/18/15'
X2		UPDATE DRAWING	Knight	07/10/15'
X3		UPDATE DRAWING	Knight	07/15/15'
X4		UPDATE DRAWING	Knight	08/14/15'
X5		UPDATE DRAWING	Dan	10/15/15'
X6		Modify PCB Layout	Dan	11/05/15'
X7		Modify Logo Position	Dan	11/11/15'
X8		Design Changed	Tim	03/28/16'
X9		Add Note 10	Tim	07/08/16'
X10		Correct	Tim	07/12/16'
X11		Add Section	Tim	08/18/16'
X12		Change Notes 2	Hill	10/25/17'
X13		Design Changed	Yuan	05/24/18'

NOTES:

1. Current Rating:1.5Amp max @25℃
2. X12 Voltage Rating:48VDC
3. Insulation Resistance:500 megohms min
4. Contact Resistance:30 milliohms max
5. Withstanding Voltage:1000 VAC
6. Durabillity:750 Cycles
7. Operating Temperature:-40℃~+85℃
8. Storage Temperature:-50℃~+75℃
9. Waterproof rate:IP67
10. X9 Torque range:15~20 lb.in

ORDER INFORMATION

WAPV-22 08 - A K 1 0 T
① ② ③④⑤⑥⑦

1. TYPE:
   WAPV-22:WATERPROOF RJ45 FEMALE
2. POSITIONS:
   08:08 POSITIONS
3. INSULATOR MATERIAL:
   A: PBT
4. INSULATOR COLOR:
   K: BLACK
5. CONTACT PLATING:
   1: GOLD FLASH
6. SHIELD PLATING:
   0: NONE SHIELD
7. PACKING
   T: TRAY

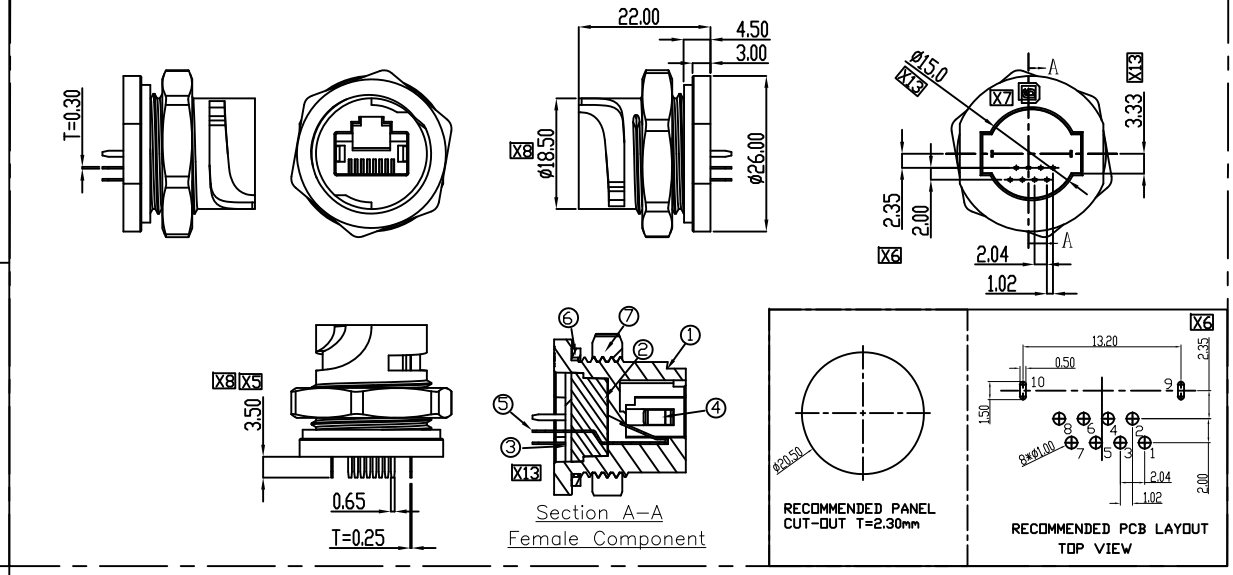

X10

ITEM	NAME	Q'TY	DESCRIPTION	NOTE
7	NUT	1	PBT+30%G.F	BLACK,UL94 V-0
6	WATERPROOF CIRCLE	2	SILICA GEL	Nature
5	8Pin CONTACT	8	PHOSPHOR BRONZE,GOLD FLASH PLATING OVER 60u" MIN NICKEL UNDER PLATING OVERALL,MATTE 120u"MIN PLATING OVER DIP AREA	T=0.30
4	GROUNDING SHRAPNEL	2	BRASS,NICKEL 60u" MIN PLATING OVERALL	T=0.25
3	WATERPROOR GLUE	1	LIQUID STATE SILICA GEL	BLACK
2	MOLDING BACK STOPPLE	1	PBT+30%G.F	BLACK,UL94 V-0
1	HOUSING	1	PBT+30%G.F	BLACK,UL94 V-0

GENERAL TOLERANCE	ANGLE TOLERANCE
X.± 0.50	X°± 5.0°
.X± 0.38	.X°± 3.0°
.XX± 0.25	.XX°± 2.0°
.XXX± 0.15	.XXX°± 1.0°

MATL
FINISH
SCALE N/A
UNIT mm
SHEET 1 OF 1

DRAWN	Yuan	DATE 05/24/18'
CHECKED		DATE
APPROVED	Vegas	DATE 05/24/18'

GENESIS TECHNOLOGY,INC

TITLE. Waterproof RJ45 Female

PART NUMBER. WAPV-2208-AK10T

DRAWING NO. GT26-210507

SIZE A4

REV. X13