SPECIFICATION

宏 致 電 子 股 份 有 限 公 司

桃園縣中壢市東園路13號

No.13, Dongyuan Rd., Jhongli City,

Taoyuan County 320, Taiwan (R.O.C.)

TEL: +886-3-463-2808
FAX: +886-3-463-1800

SPEC. NO.: PS-87224-TXXX **REVISION:** O

PRODUCT NAME: 1.0MM WTB CRIMPING TERMINAL

PRODUCT NO: 87224-Txxx

PREPARED:	CHECKED:	APPROVED:
Simon	**Sean**	**Jason**
DATE: **2009/09/02**	DATE: **2009/09/02**	DATE: **2009/09/02**

1 REVISION HISTORY 3
2 ANATOMY OF A TERMINAL： 4
3 APPLICABLE WIRES： UL10064 4
4 CRIMPING CONDITION： 5
5 CRIMP HEIGHT MEASUREMENT： 6
6 PULL FORCE OF CRIMP SECTION MEASUREMENT： 7
7 STANDARD INSULATION CRIMP： 7
8 CONDUCTORS CRIMP CONDITION： 8
9 CRIMPING REQUIREMENTS： 9

1 Revision History

Rev.	ECN #	Revision Description	Approved	Date
1	0909010	PROPOSAL	JASON	2009/09/02
2	0910089	MODIFY CRIMPING HEIGHT AND WIDTH FOR 36#	JASON	2009/11/2
O	0912311	NEW RELEASE	JASON	2009/12/30

2

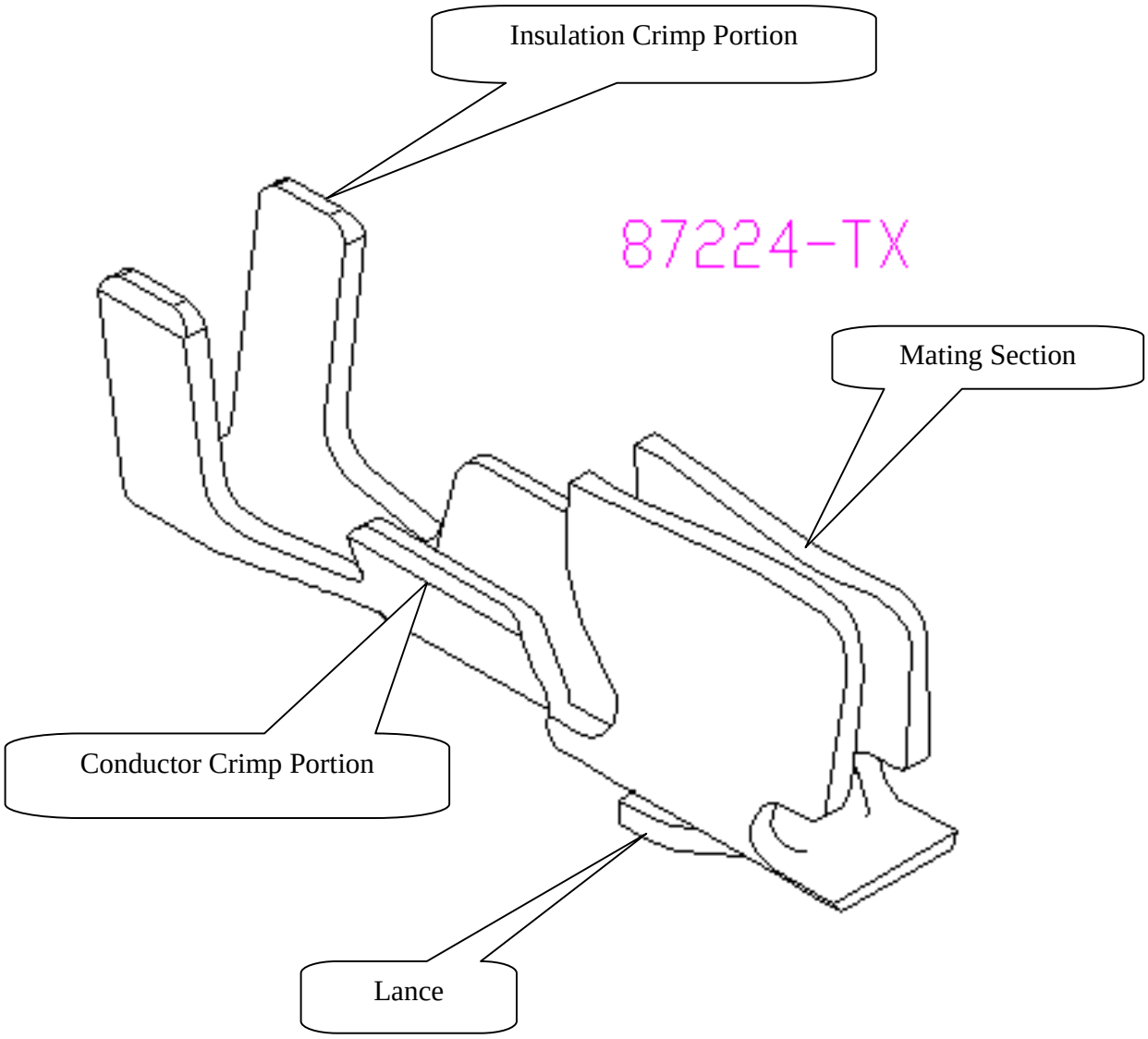

3 Applicable Wires： UL10064 wire

AWG Size： AWG＃36

Insulation OD： Φ0.29mm

4 Crimping Condition：

CRIMPING CONDITION							
NO.	UL Style	Specification		Conductor crimping height (mm)	Insulator crimping height (mm)	Crimping retention force	Remarks
1	UL10064 Stranded wire	AWG	36	0.29~0.31	0.59~0.68	2N MIN	Tin plated annealed copper wire
		Construction	7C*Φ0.05mm				
		Sec. area	0.017m m²				
		Insulation OD	0.25±0.02mm				

Note:

1、 W1(Conductor Crimping Width)：W1=0.62~0.64mm(Ref.)

2、 W2(Insulator Crimping Width)：W2=0.65~0.74mm (Ref.)

3、 A (conductor Crimping height)：A=0.29~0.31mm (Ref.)

4、 B (Insulator Crimping height)：B=0.59~0.68mm (Ref.)

5、 Strip Length：1.6mm(Ref.)

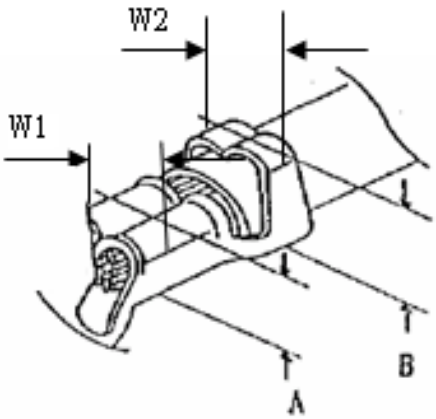

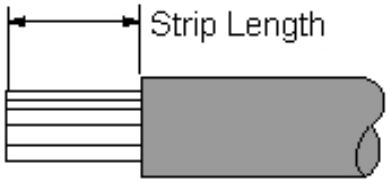

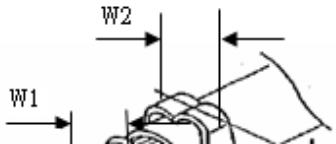

5 Crimp Height Measurement：

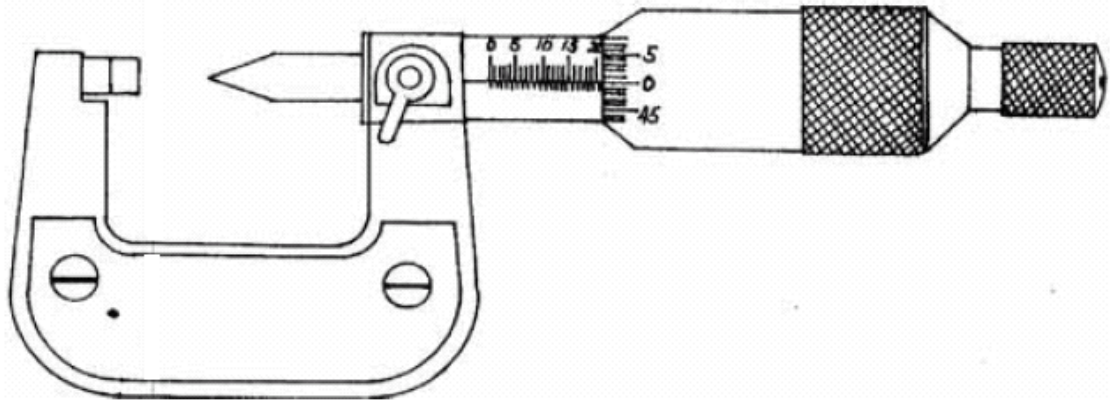

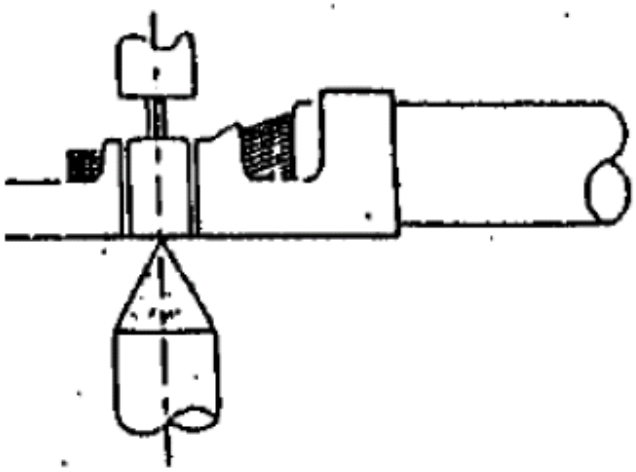

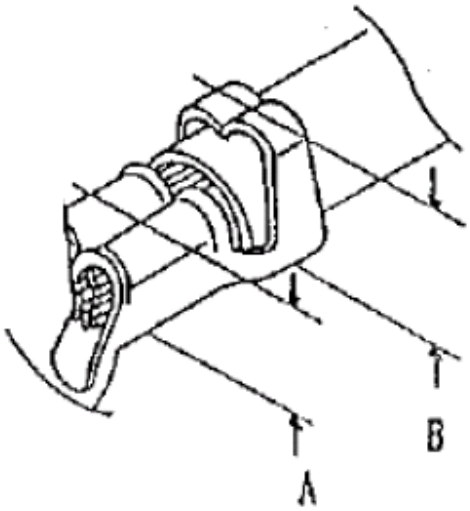

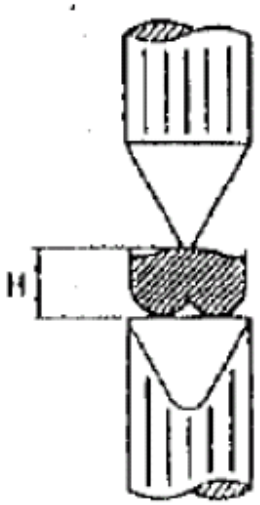

6 Pull Force of Crimp Section Measurement：

Before test samples, please measure crimp height and do not crimp insulation.

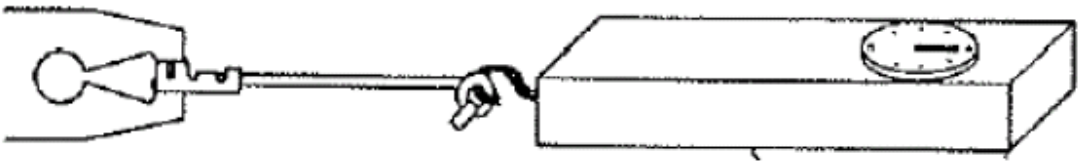

Pull Force of Crimp Section Measurement

7 Standard Insulation Crimp：

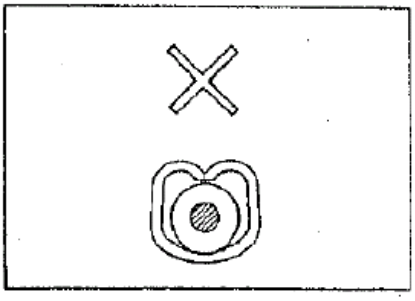

Not enough crimp

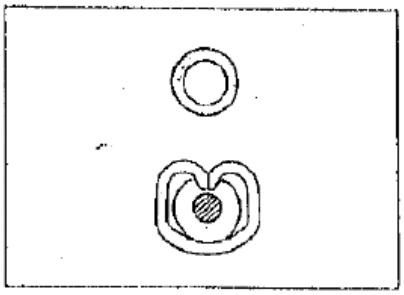

Good

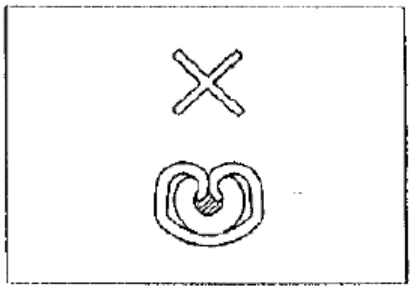

Crimp too much

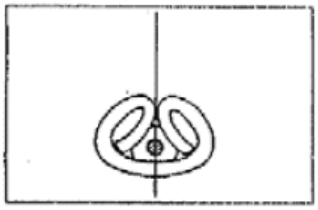

Good

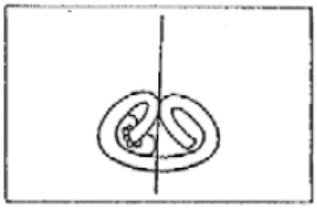

NG

Insulation Crimp Condition

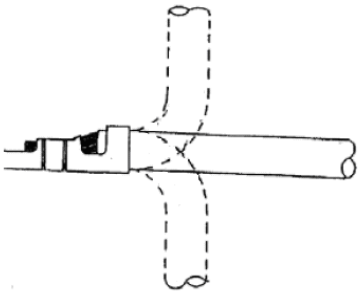

As following figure shown.
It is no problem if wire bent up down 90 degrees 1 cycle and insulation position still in ideal position.

8 Conductors Crimp Condition：

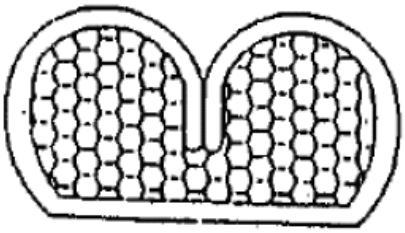

Good

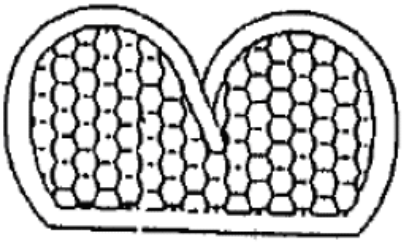

NG

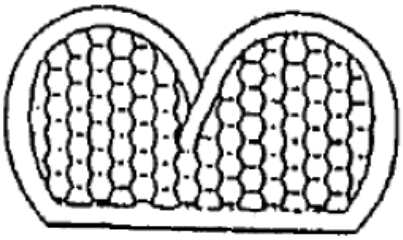

NG

Lower conduct retension force

Good

Large burr

NG

9 Crimping Requirements：

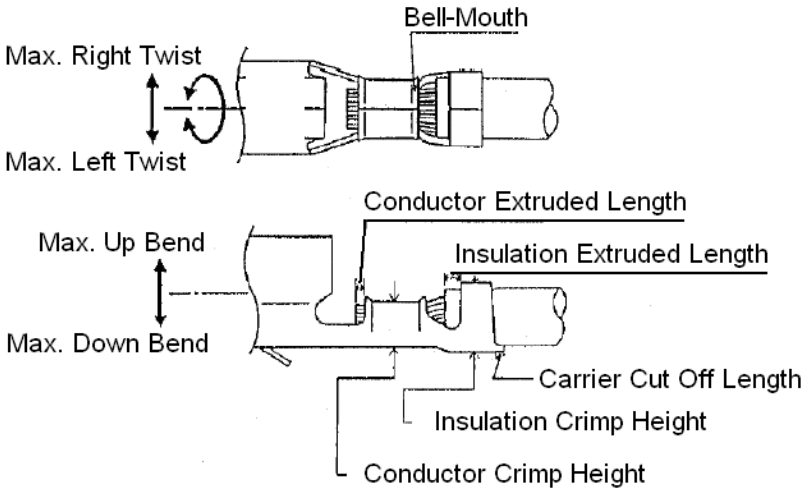

Item	Range (Ref.)
Max. Up Bend	6°
Max. Down Bend	6°
Max. Left Twist	5°
Max. Right Twist	5°
Bell-Mouth Length	0.24 mm
Carrier Cut Off Length	0.2mm MAX
Conductor Extruded Length	0.35 mm