SPECIFICATION

宏 致 電 子 股 份 有 限 公 司

桃 園 縣 中 壢 市 東 園 路 13 號

No.13, Dongyuan Rd., Jhongli City,

Taoyuan County 320, Taiwan (R.O.C.)

TEL: +886-3-463-2808
FAX: +886-3-463-1800

SPEC. NO.: PS-31863-XXXXX-001 **REVISION:** A

PRODUCT NAME: 0.5 mm PITCH USB TYPE C CONN.

PRODUCT NO: 31863 / 31884 Series

PREPARED:	CHECKED:	APPROVED:
Hsu, Wei Chun	**Chang, Chun Te**	**Kuo, Rong Hsun**
DATE: **2020.10.28**	DATE: **2020.10.28**	DATE: **2020.10.28**

1. REVISION HISTORY ……..……..3
2. SCOPE …...……4
3. APPLICABLE DOCUMENTS ...……4
4. REQUIREMENT ……4
5. PERFORMANCE ……...5
6. PRIMARY QUALIFICATION APPROVAL TESTING …..……10
7. GROUP TEST METHOD …...……13
8. INFRARED REFLOW CONDITION ……..25

1 Revision History

Rev.	ECN #	Revision Description	Prepared	Date
A	ECN-000948	New product specification	Hsu, Wei Chun	2020.10.28

2 SCOPE

This specification covers performance, tests and quality requirements for 0.5mm pitch USB Type C connector.

Aces' P/N: Receptacle：31863
Plug : 31884

3 APPLICABLE DOCUMENTS

Universal Serial Bus Type-C Cable and Connector Specification
EIA-364 : ELECTRONICS INDUSTRIES ASSOCIATION

4 REQUIREMENTS

4.1 Design and Construction

Product shall be of design, construction and physical dimensions specified on applicable product drawing.

4.2 Materials and Finish

4.2.1 Contact: High performance Copper alloy
Finish: Refer to the drawing.

4.2.2 Housing: Thermoplastic, High temp. UL94 V-0

4.2.3 Shell: Stainless steel
Finish: Refer to the drawing.

4.2.4 Receptacle Mid-Plate: Stainless steel
Finish: Refer to the drawing.

4.2.5 Plug Side Latch: Stainless steel
Finish: Refer to the drawing.

4.2.6 Plug EMC Spring: Stainless steel
Finish: Refer to the drawing.

4.3 Ratings

4.3.1 Rated voltage: AC 20 V

4.3.2 Current:
A current of 9 A shall be applied collectively to V_{BUS} pins (i.e., pins A4, A9, B4, and B9) and 1.25 A shall be applied to the V_{CONN} pin (i.e., B5) as applicable, terminated through the corresponding GND pins (i.e., pins A1, A12, B1, and B12). A minimum current of 0.25 A shall also be applied individually to all the other contacts, as applicable.

4.3.3 Operating Temperature : -40℃ to +85℃

5 Performance

5.1. ELECTRICAL REQUIREMENTS

ELECTRICAL		
Item	**Test Condition**	**Requirement**
Low Level Contact Resistance(LLCR)	EIA-364-23 The measurement is made across the plug and receptacle mated contacts and does not include any internal paddle cards or substrates of the plug or receptacle. Measure at 20 mV (Max) open circuit at 100 mA.	40 mΩ (max) initial for all pin 50 mΩ (max) after initial measurement.
Insulation Resistance	EIA 364-21. Mated and unmated connectors, apply 100 V DC between adjacent terminals. Applicable to both receptacle and plug.	A minimum of 100 MΩ insulation resistance
Dielectric Withstanding Voltage	EIA-364-20 The dielectric shall withstand 100 VAC (RMS) for one minute at sea level after the environmental stress	No disruptive discharge Current leakage: 1 mA max.
Contact Current Rating	Mate connector: measure the temperature rise at rated current after: A current of 9 A shall be applied collectively to V_{BUS} pins (i.e., pins A4, A9, B4, and B9) and 1.25 A shall be applied to the V_{CONN} pin (i.e., B5) as applicable, terminated through the corresponding GND pins (i.e., pins A1, A12, B1, and B12). A minimum current of 0.25 A shall also be applied individually to all the other contacts The ambient condition is still air at 25° C (EIA-364-70 METHOD 2)	When current is applied to the contacts, the temperature rise shall not exceed 30°C at the outside surface of the shell.

5.2 MECHANICAL REQUIREMENTS

MECHANICAL		
Item	**Test Condition**	**Requirement**
Insertion Force	EIA 364-13 Mate connector, At a maximum rate of 12.5 mm (0.492") per minute.	Within the range of 5 N to 20 N..
Extraction Force	EIA 364-13 Un-mate connector, At a maximum rate of 12.5mm (0.492") per minute.	Initial: Within the range of 8 N to 20 N. After Test: Within the range of 6 N to 20 N
Durability	The durability rating shall be 10,000 cycles minimum for the USB Type-C connector family. The durability test shall be done at a rate of 500+/-50 cycles per hour and no physical damage to any part of the connector and cable assembly shall occur. (EIA-364-09)	No physical damage Contact resistance: 50 mΩ Max. After initial measurement Dielectric withstanding voltage: No disruptive discharge. Current leakage: 1 mA max. Insulation Resistance: 100 MΩ min. Extraction Force: Within the range of 6 N to 20 N
Durability (preconditioning)	Perform 50 unplug/plug cycles (EIA-364-09)	No physical damage
Vibration	EIA-364-28, test condition VII, test condition letter D,15 minutes in each of 3 mutually perpendicular directions. Both mating halves should be rigidly fixed so as not to contribute to the relative motion of one contact against another.	No evidence of physical damage. No discontinuities of 1 μs or longer duration when mated connector during test. Contact resistance : 50 mΩ Max
4-Axis Continuity Test	-The PCB shall be clamped on three sides of the receptacle no further than 5 mm away from the receptacle outline. - 5 mm ball tipped probe applied the force - Duration : 10 seconds - Direction: four directions (i.e., left, right, up, and down).	No discontinuities greater than 1 microsecond duration in any of the four orientations tested.

Wrenching Test	- Plug only - Direction: four directions (i.e., left, right, up, and down). - Duration: 10 seconds	The plug shall be mated with the continuity test fixture after the test forces have been applied to verify no damage has occurred that causes discontinuity or shorting. No plug damage: 0.75 Nm. No discontinuity or short after the test force applied. Dielectric withstanding voltage: No disruptive discharge for 100VAC(rms) The plug shall disengage from the test fixture or mechanically fail when a moment of 2.0 Nm is applied in the up and down directions and a moment 3.5 Nm is applied in the left and right directions.

5.3 ENVIRONMENTAL REQUIREMENTS

ENVIRONMENTAL		
Item	**Test Condition**	**Requirement**
Temperature life	EIA-364-17, method A 105º C without applied voltage for 120 hours.	No evidence of physical damage. Contact resistance: 50 mΩ Max.
Temperature life (preconditioning)	EIA-364-17, method A 105º C without applied voltage for 72 hours.	No evidence of physical damage. Contact resistance: 50 mΩ Max.
Thermal shock	EIA-364-32, test condition I 10 cycles with the exception of exposure times. Place a thermocouple in the center of the largest mass component of the connector that is in the center of the test chamber to insure that the contacts reach the temperature extremes before ramping to the other temperature.	No evidence of physical damage. Contact resistance: 50 mΩ Max.
Mixed flowing gas	EIA-364-65, class II Condition A Mate connectors, and subject to the mixed flowing gas conditions. 1)expose 1/2 of the specimens unmated for 2/3 of the test duration 2)mate each specimen to the same plug that it was mated to during temperature life (preconditioning); and, 3) expose for the remainder of the test duration. Duration: 7 day	No evidence of physical damage. Contact resistance: 50 mΩ Max.
Thermal disturbance	Cycle the connector or socket between 15 °C ±3 °C and 85 °C ± 3 °C, as measured on the part. Ramps should be a minimum of 2 °C per minute, and dwell times should insure that the contacts reach the temperature extremes (a minimum of 5 minutes). Humidity is not controlled. Perform 10 such cycles.	Contact resistance: 50 mΩ Max.

Cyclic temperature and humidity	EIA-364-31 Cycle the connector between 25 °C ±3 °C at 80 % ±3% RH and 65 °C ±3 °C at 50 % ±3% RH. Ramp times should be 0.5 hour and dwell times should be 1.0 hour. Dwell times start when the temperature and humidity have stabilized within the specified levels. Perform 24 such cycles.	No mechanical damage. Contact resistance: 50 mΩ Max. Insulation resistance: 100 MΩ min. Dielectric withstanding voltage: No disruptive discharge. Current leakage: 1 mA max.
Reseating	Manually unplug/plug the connector. Perform 3 such cycles.	No physical damage

6 PRIMARY QUALIFICATION APPROVAL TESTING

Test Group	Title	Number of Specimens	
		Receptacle	Plug
Test Group A	Reliability test EIA 364-1000.01 (A-1/A-2 / A-3 / A-4 / A-7)	30pcs	30pcs
Test Group B-1	Mechanical test (B-1-4：4-Axis Continuity)	B-1-4 only ,8 pcs	B-1-4 only ,8 pcs
Test Group B-5	B-5-1：Critical Dimensions B-5-2：EMC Shielding Spring Inspection	3	3
Test Group B-6	Connector Pair Current Rating	3	3
Test Group B-7	Plug connector Wrenching test	N/A	B-7-1 ,3 pcs B-7-4 ,12 pcs

6.1 Test Group A_EIA 364-1000.1

Group A-1 5 sample	Group A-2 5 sample	Group A-3 5 sample	Group A-4 10 sample	Group A-7 5 sample
Examination	Examination	Examination	Examination	Dielectric withstanding voltage
LLCR	LLCR	LLCR	LLCR	LLCR
Durability (50cyc)	Durability (50cyc)	Durability (50cyc)	Durability (50cyc)	Insertion Force
Temperature life (120hr)	Thermal Shock	Temp Life (72hr)	Temp Life (72hr)	Extraction Force
LLCR	LLCR	LLCR	LLCR	Durability
Reseating(3cyc)	Cyclic temperature and Humidity	Vibration	Mixed flowing gas	Extraction Force
LLCR	LLCR	LLCR	LLCR	Durability (10k)
	Reseating(3cyc)		Thermal Disturbance	Extraction Force
	LLCR		LLCR	LLCR
			Reseating(3cyc)	Dielectric withstanding voltage
			LLCR	Insulation Resistance

EIA test groups A-5 and A-6 do not apply to this connector

6.2 Test Group B

Group B-1 Mechanical	Group B-2 USB 2.0 and Low speed Mechanical	Group B-3 SS signal Testing	Group B-4 Cable Shielding	Group B-5 Critical Dimensions	Group B-6	Group B-7 Wrenching Test
Cable Pull out (For cable assembly only.)	Applicable to Type-C Cable and Adaptor Assemblies			Critical Dimensions	Contact Current Rating	Wrenching Strength (For Plug Connector)
Cable Flex (For cable assembly only.)				EMC Shielding Spring Inspection		Continuity (For Plug Connector)
4-Axis Continuity						Dielectric withstanding voltage (For Plug Connector)
Voltage drop (For cable assembly only.)						Wrenching Strength (For Plug Connector)
Visual inspection (cable/wire)						

7 GROUP TEST METHOD

Test Group A-1 (required for all connectors)

Item	Test	Test procedure	Test criteria
1	**Low level contact resistance**	EIA-364-23 The measurement is made across the plug and receptacle mated contacts and does not include any internal paddle cards or substrates of the plug or receptacle. Measure at 20 mV (Max) open circuit at 100 mA. 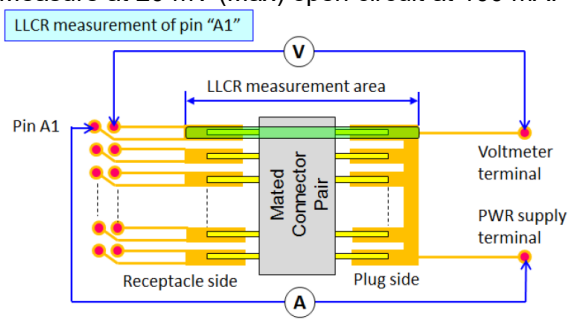 	40 milliohms max for all contacts. Baseline measurement.
2	**Durability (preconditioning)**	EIA-364-09 Perform 50 unplug/plug cycles.	No evidence of physical damage
3	**Temperature life**	EIA-364-17, method A 105º C without applied voltage for 120 hours.	None
4	**Low level contact resistance**	EIA-364-23 The measurement is made across the plug and receptacle mated contacts and does not include any internal paddle cards or substrates of the plug or receptacle.	50 milliohms max.
5	**Reseating**	Manually unplug/plug the connector or socket. Perform 3 such cycles.	No evidence of physical damage
6	**Low level contact resistance**	EIA-364-23 The measurement is made across the plug and receptacle mated contacts and does not include any internal paddle cards or substrates of the plug or receptacle.	50 milliohms max.

Test Group A-2 (required for all connectors)

<table>
<tr><th>Item</th><th>Test</th><th>Test procedure</th><th>Test criteria</th></tr>
<tr><td>1</td><td>Low level contact resistance</td><td>EIA-364-23
The measurement is made across the plug and receptacle mated contacts and does not include any internal paddle cards or substrates of the plug or receptacle.</td><td>40 milliohms max for all contacts.
Baseline measurement.</td></tr>
<tr><td>2</td><td>Durability (preconditioning)</td><td>EIA-364-09
Perform 50 unplug/plug cycles.</td><td>No evidence of physical damage</td></tr>
<tr><td>3</td><td>Thermal shock</td><td>EIA-364-32, test condition I
10 cycles with the exception of exposure times.
Place a thermocouple in the center of the largest mass component of the connector that is in the center of the test chamber to insure that the contacts reach the temperature extremes before ramping to the other temperature.
<table>
<tr><th rowspan="2">Step</th><th colspan="2">Test condition I</th></tr>
<tr><th>Temperature, °C</th><th>Time , minutes</th></tr>
<tr><td>1</td><td>-55 +0 -3</td><td>30 min</td></tr>
<tr><td>2</td><td>25 +10 -5</td><td>5 max</td></tr>
<tr><td>3</td><td>85 +3 0</td><td>30 min</td></tr>
<tr><td>4</td><td>25 +10 -5</td><td>5 max</td></tr>
</table></td><td>None</td></tr>
<tr><td>4</td><td>Low level contact resistance</td><td>EIA-364-23
The measurement is made across the plug and receptacle mated contacts and does not include any internal paddle cards or substrates of the plug or receptacle.</td><td>50 milliohms max.</td></tr>
</table>

5	**Cyclic temperature and humidity**	EIA-364-31 Cycle the connector between 25 °C ±3 °C at 80 % ±3% RH and 65 °C ±3 °C at 50 % ±3% RH. Ramp times should be 0.5 hour and dwell times should be 1.0 hour. Dwell times start when the temperature and humidity have stabilized within the specified levels. Perform 24 such cycles. 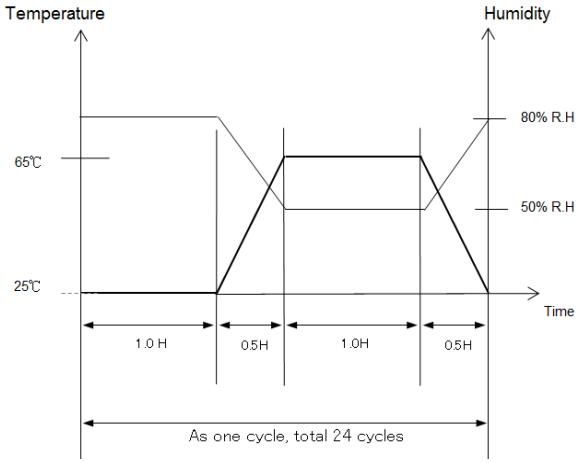 	None
6	**Low level contact resistance**	EIA-364-23 The measurement is made across the plug and receptacle mated contacts and does not include any internal paddle cards or substrates of the plug or receptacle.	50 milliohms max.
7	**Reseating**	Manually unplug/plug the connector or socket. Perform 3 such cycles.	No evidence of physical damage
8	**Low level contact resistance**	EIA-364-23 The measurement is made across the plug and receptacle mated contacts and does not include any internal paddle cards or substrates of the plug or receptacle.	50 milliohms max.

Test Group A-3 (required for all connectors)

Item	Test	Test procedure	Test criteria
1	**Low level contact resistance**	EIA-364-23 The measurement is made across the plug and receptacle mated contacts and does not include any internal paddle cards or substrates of the plug or receptacle.	40 milliohms max for all contacts. Baseline measurement.
2	**Durability (preconditioning)**	EIA-364-09 Perform 50 unplug/plug cycles.	No evidence of physical damage
3	**Temperature life (preconditioning)**	EIA-364-17, method A 105º C without applied voltage for 72 hours when used as preconditioning.	None
4	**Low level contact resistance**	EIA-364-23 The measurement is made across the plug and receptacle mated contacts and does not include any internal paddle cards or substrates of the plug or receptacle.	50 milliohms max.
5	**Vibration**	EIA-364-28, test condition VII, test condition letter D 15 minutes in each of 3 mutually perpendicular directions. Both mating halves should be rigidly fixed so as not to contribute to the relative motion of one contact against another. 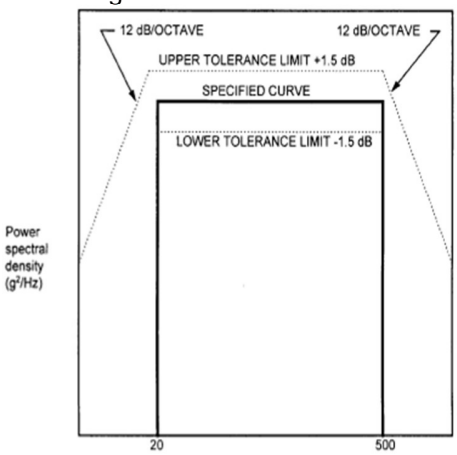	No evidence of physical damage. No discontinuities of 1 µs or longer duration when mated connector during test.
6	**Low level contact resistance**	EIA-364-23 The measurement is made across the plug and receptacle mated contacts and does not include any internal paddle cards or substrates of the plug or receptacle.	50 milliohms max.

Test Group A-4 (required for all connectors)

Item	Test	Test procedure	Test criteria
1	**Low level contact resistance**	EIA-364-23 The measurement is made across the plug and receptacle mated contacts and does not include any internal paddle cards or substrates of the plug or receptacle.	40 milliohms max for all contacts. Baseline measurement.
2	**Durability (preconditioning)**	EIA-364-09 Perform 50 unplug/plug cycles.	No evidence of physical damage
3	**Temperature life (preconditioning)**	EIA-364-17, method A 105º C without applied voltage for 72 hours when used as preconditioning.	None
4	**Low level contact resistance**	EIA-364-23 The measurement is made across the plug and receptacle mated contacts and does not include any internal paddle cards or substrates of the plug or receptacle.	50 milliohms max.
5	**Mixed flowing gas**	EIA-364-65, class II Condition A -Mate state (5pcs) 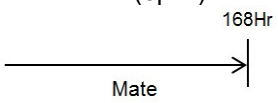 -Unmate state (5pcs) 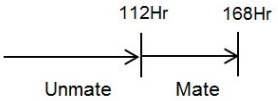 Relative: Environmental Class II; Humidity % 70±2; Temperature °C 30±1 Rollutant Concentration, ppb: Cl_2 10±3; NO_2 200±50; H_2S 10±5; SO_2 100±20	None
6	**Low level contact resistance**	EIA-364-23 The measurement is made across the plug and receptacle mated contacts and does not include any internal paddle cards or substrates of the plug or receptacle.	50 milliohms max.

7	**Thermal disturbance**	Cycle the connector or socket between 15 °C ±3 °C and 85 °C ± 3 °C, as measured on the part. Ramps should be a minimum of 2 °C per minute, and dwell times should insure that the contacts reach the temperature extremes (a minimum of 5 minutes). Humidity is not controlled. Perform 10 such cycles. 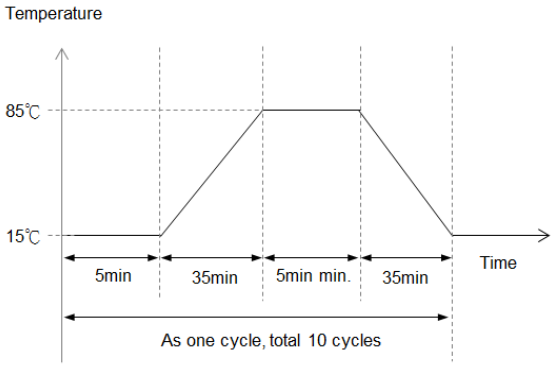	None
8	**Low level contact resistance**	EIA-364-23 The measurement is made across the plug and receptacle mated contacts and does not include any internal paddle cards or substrates of the plug or receptacle.	50 milliohms max.
9	**Reseating**	Manually unplug/plug the connector or socket. Perform 3 such cycles.	No evidence of physical damage
10	**Low level contact resistance**	EIA-364-23 The measurement is made across the plug and receptacle mated contacts and does not include any internal paddle cards or substrates of the plug or receptacle.	50 milliohms max.

Test Group A-7 (EIA test groups A-5 and A-6 do not apply to this connector)

Item	Test	Test procedure	Test criteria
1	**Dielectric withstanding voltage**	EIA-364-20, 100 VAC (RMS) Perform 4 plug/unplug cycles. (Total:4 cycles)	No disruptive discharge Current leakage: 1 mA max.
2	**Low level contact resistance**	EIA-364-23 The measurement is made across the plug and receptacle mated contacts and does not include any internal paddle cards or substrates of the plug or receptacle.	40 milliohms max.
3	**Durability (preconditioning)**	EIA-364-09 Perform 4 unplug/plug cycles, followed by an unplug.	No evidence of physical damage.
4	**Insertion force**	EIA 364-13 At a maximum rate of 12.5 mm (0.492”) per minute. (Total:5 cycles)	Within the range of 5 N to 20 N.
5	**Extraction force**	EIA 364-13 At a maximum rate of 12.5mm (0.492") per minute. (Total:6 cycles)	Within the range of 8 N to 20 N.
6	**Durability**	EIA 364-9 Perform 25 plug/unplug cycles. Cycle rate of 500 ± 50 cycles per hour followed by a plug. (Total:31 cycles)	No evidence of physical damage
7	**Extraction force**	EIA 364-13 At a maximum rate of 12.5mm (0.492") per minute (Total:32 cycles)	Within 8 N to 20 N.
8	**Durability**	EIA 364-9 Perform 2,468 plug/unplug cycles. (Total:2500 cycles) Rotate the receptacle or plug 180° and perform 2,500 plug/unplug cycles. Cycle rate of 500 +/-50 cycles per hour (total of 10,000 plug/unplug cycles, flipping every 2,500 cycles).	No evidence of physical damage
9	**Extraction force**	EIA 364-13 At a maximum rate of 12.5mm (0.492") per minute	Within 6 N to 20 N.

10	**Low level contact resistance**	EIA-364-23 The measurement is made across the plug and receptacle mated contacts and does not include any internal paddle cards or substrates of the plug or receptacle.	50 milliohms max.
11	**Dielectric withstanding voltage**	EIA-364-20, 100 VAC (RMS)	No disruptive discharge. Current leakage: 1 mA max.
12	**Insulation Resistance**	EIA 364-21. Mated and unmated connectors, apply 100 V DC between adjacent terminals. Applicable to both receptacle and plug.	A minimum of 100 MΩ insulation resistance is required between adjacent contacts of unmated and mated connectors

Test Group B-1: Type-C Connector and Cable Assembly Mechanical Tests

Item	Test	Test procedure	Test criteria
B-1-4	**4-Axis Continuity**	-The PCB shall be clamped on three sides of the receptacle no further than 5 mm away from the receptacle outline. - 5 mm ball tipped probe applied the force - Duration : 10 seconds - Direction: four directions (i.e., left, right, up, and down). 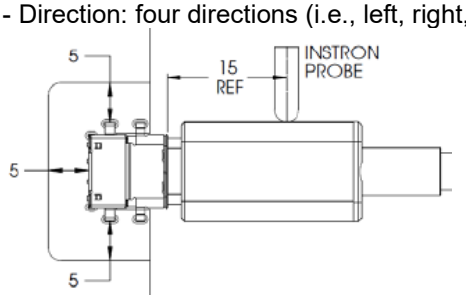 **Force and Moment Requirements** Receptacle configuration with respect to mounting surface / Force at 15 mm from receptacle shell mating edge (N) / Moment with respect to receptacle shell mating edge (Nm) Right angle: 20 / 0.30 Vertical: 8 / 0.12	No discontinuities greater than 1 microsecond duration in any of the four orientations tested.

Test Group B-5: Critical Dimensions

Item	Test	Test procedure	Test criteria
B-5-1	**Critical Dimensions**	See customer drawing	N/A
B-5-2	**EMC Shielding Spring Inspection**	Visual inspection for compliance with Figure. 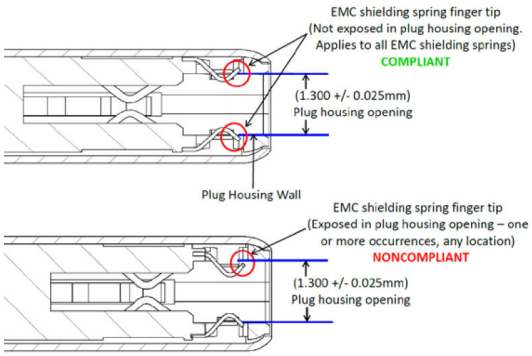	No EMC shielding spring finger tip of the USB Full-Featured Type-C plug or USB 2.0 Type-C plug shall be exposed in the plug housing opening of the unmated Type-C plug.

Test Group B-6: Connector Pair Current Rating

Item	Test	Test procedure	Test criteria
B-6	**Contact Current Rating**	Mate connector: measure the temperature rise at rated current after: A current of 9 A shall be applied collectively to V_{BUS} pins (i.e., pins A4, A9, B4, and B9) and 1.25 A shall be applied to the V_{CONN} pin (i.e., B5) as applicable, terminated through the corresponding GND pins (i.e., pins A1, A12, B1, and B12). A minimum current of 0.25 A shall also be applied individually to all the other contacts The ambient condition is still air at 25° C (EIA-364-70 METHOD 2) 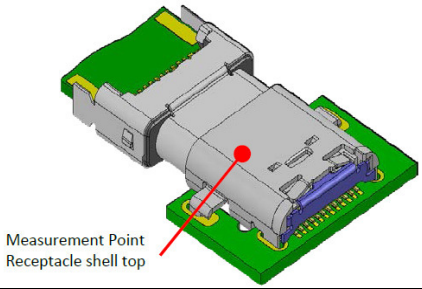 	When current is applied to the contacts, the temperature rise shall not exceed 30°C at the outside surface of the shell. This requirement applies to the USB Type-C connector mated pair only.

Current Rating Test PCB			
Item	Trace width (mm)	Trace length (mm) on each PCB	Thickness
Signal trace	0.25 max.	13 max.	70 µm (2 oz. copper)
Ground trace	1.57 max.	38 max.	70 µm (2 oz. copper)
V_{BUS} and V_{CONN}	1.25 max.	30 max.	70 µm (2 oz. copper)
PCB	N/A	N/A	0.80 - 1.20 mm

Test Group B-7: Plug Connector Wrenching Test

Item	Test	Test procedure	Test criteria
B-7-1	**Wrenching Test**	- Plug only - Direction: four directions (i.e., left, right, up, and down). - Duration: 10 seconds 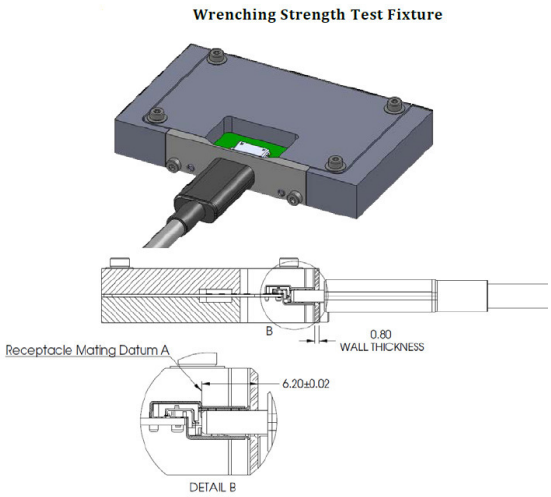	The plug shall be mated with the continuity test fixture after the test forces have been applied to verify no damage has occurred that causes discontinuity or shorting. No plug damage: 0.75 Nm. No discontinuity or short after the test force applied.
B-7-2	**Continuity**		
B7-3	**Dielectric withstanding voltage**	Mated, 100 VAC (RMS)	No disruptive discharge. Current leakage: 1 mA max.

B-7-4	**Wrenching Test**	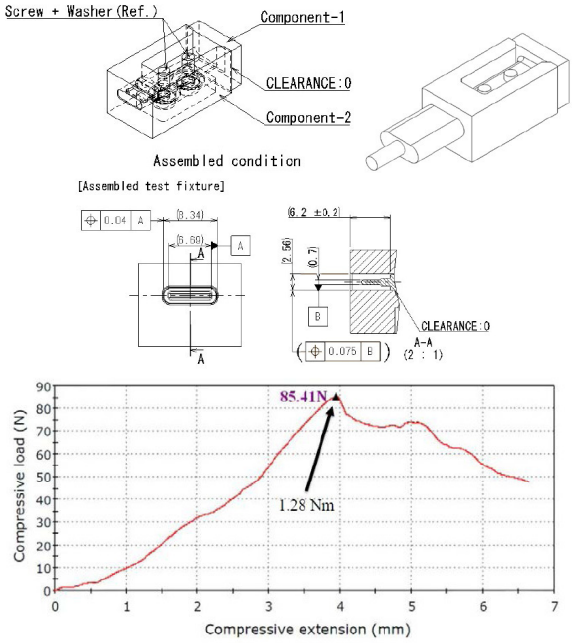 Example of Wrenching Strength Test Mechanical failure poin	The plug shall disengage from the test fixture or mechanically fail when a moment of 2.0 Nm is applied in the up and down directions and a moment 3.5 Nm is applied in the left and right directions.

8 INFRARED REFLOW CONDITION
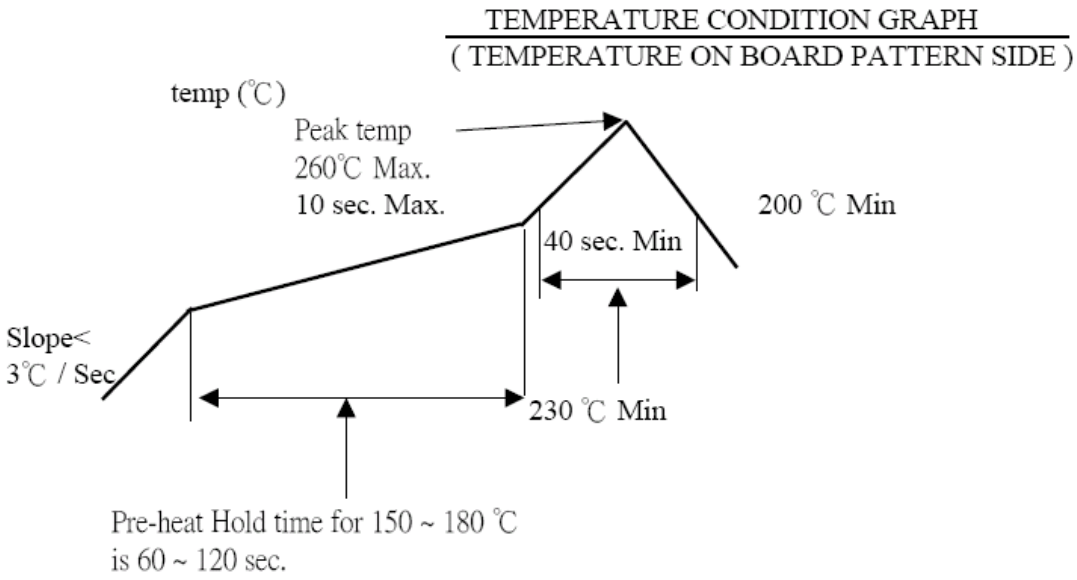
8.1. Lead-free Process