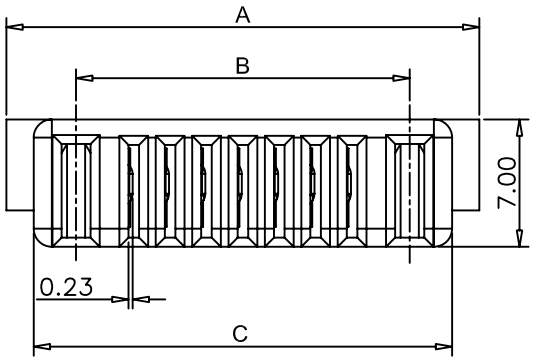

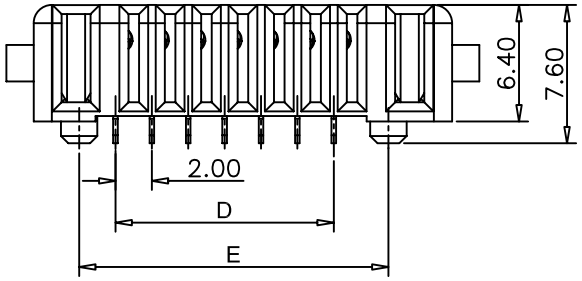

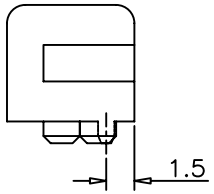

NOTES:
1. MATERIAL:
   1.1 HOUSING: THERMOPLASTIC, HIGH TEMP., UL94V-0; COLOR:BLACK.
   1.2 CONTACT: COPPER ALLOY

2. FINISH:
   2.1 CONTACT:
   GOLD FLASH PLATING(5u"MIN) ON OVERALL, 50~100u" NICKEL UNDERPLATING OVERALL.
3. REFLOW SOLDER CAPABLE TO 260° C PER ACES SPEC.
4. WAVE SOLDER CAPABLE TO 260° C PER ACES SPEC.
5. SPEC. PLS. REFER TO PS-50971-xxxxx
6. PACKAGE PLS. REFER TO 91971-xxxxx-TRP

7. PART NUMBER

50971-XXX X X-XXX

- NO OF CKT
- PACKING: 0:TAPE & REEL; 1:TUBE
- PLATING: B:5U"MIN GOLD FALSH OVERALL(LEAD FREE)
- COLOR OF HOUSING: 001: BLACK

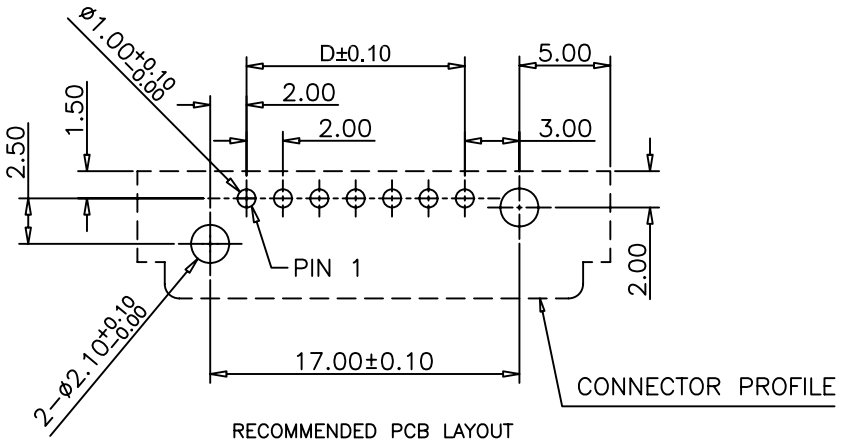

RECOMMENDED PCB LAYOUT
GENERAL TOLERANCE ±0.05

CKT	DIM A	DIM B	DIM C	DIM D	DIM E
7	26.00	18.34	23.00	12.00	17.00
8	28.00	20.34	25.00	14.00	19.00

一般公差 TOLERANCES
X. ±0.50 .XX ±0.15
.X ±0.25 .XXX ±0.10
ANGLES ±2°

宏致電子股份有限公司
Aces Electronic Co.,Ltd.

檢驗尺寸標示 SYMBOLS (CR) (MJ) INDICATE CLASSIFICATION DIMENSION
(CR) MARK IS CRITICAL DIM.
(MJ) MARK IS MAJOR DIM.

品名 (TITLE): 2.0 mm BATTERY FEMALE T/H R/A S/R TYPE CONNECTOR

圖號 (DWG.NO): 50971-XXXXX-XXX

製圖 (DR): '09/10/22 Brave
審核 (CHKD): SAM
核准 (APPD): JASON

表面處理 (FINISH)

比例 (SCALE): 3:1
單位 (UNITS): mm

張數 (SHEET): 1 OF 1
SIZE: A4
REV: 0