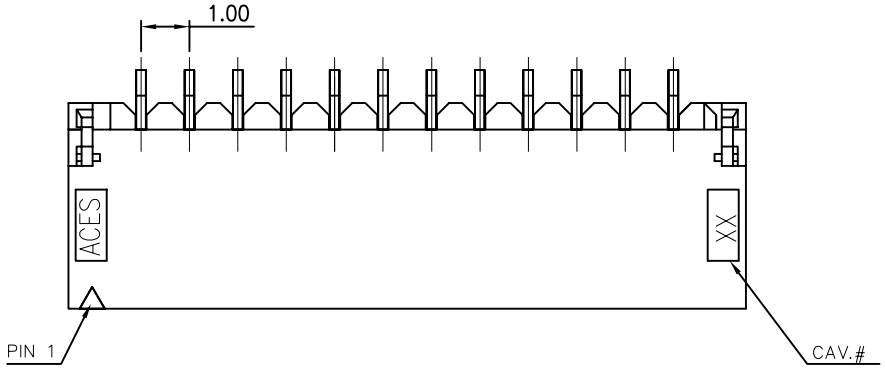

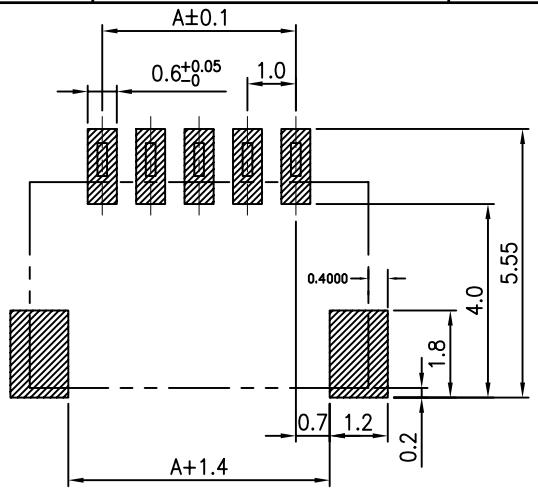

RECOMMENDED PCB LAYOUT
GENERAL TOLERANCE ±0.05

NOTES:
1. MATERIAL:
   1.1 HOUSING: THERMOPLASTIC, HIGH TEMP., UL94V-0; COLOR:BLACK.
   1.2 CONTACT: COPPER ALLOY
   1.3 FITTING NAIL: COPPER ALLOY
2. FINISH:
   2.1 CONTACT: 50~100u" NICKEL UNDERPLATING OVERALL.
       1:GOLD FLLASH OVER ALL, OVERALL.
       N:100~200u" MATT TIN PLATING ON SOLDER TAILS,
   2.2 FITTING NAIL: 50~100u" NICKEL UNDERPLATING OVERALL.
       1:GOLD FLLASH OVER ALL, OVERALL.
       N:100~200u" MATT TIN PLATING ON SOLDER TAILS,
3. REFLOW SOLDER CAPABLE TO 260°C PER ACES SPEC.
4. SPEC. PLS. REFER TO PS-50441-xxxxx-xxx
5. PACKAGE PLS. REFER TO 87213-XXXX-TRP
6. PART NUMBER

P/N LEGEND

50441-XXX X X-XXX

NO OF CKT

PACKING
0:TAPE & REEL
1:TUBE PACKAGE

PLATING
1:GOLD FLASH OVER ALL
N:MATT TIN(LEAD FREE)

XXX	HOUSING&COLOR	Halogen Free
001	BLACK	YES

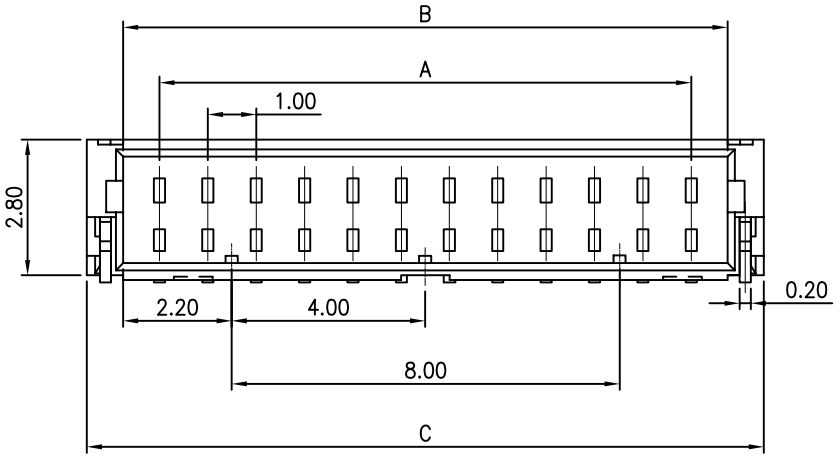

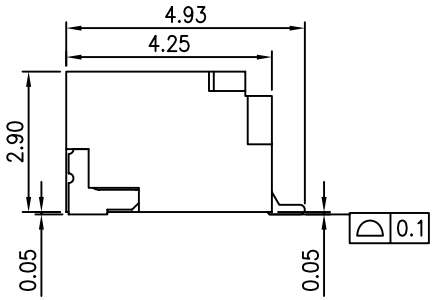

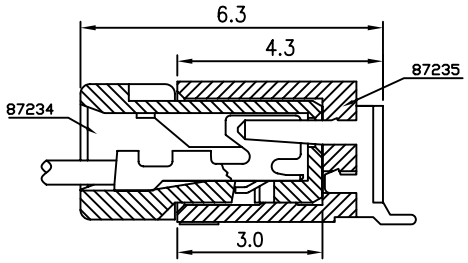

MATED CONDITION

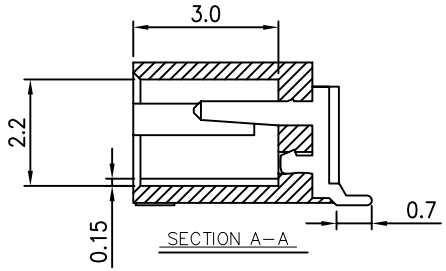

SECTION A-A

CKT	DIM A	DIM B	DIMC
012	11.0	12.4	14.0

一般公差
TOLERANCES
X. ±0.5 .XX ±0.15
.X ±0.25 .XXX ±0.1
ANGLES ±2°

宏致電子股份有限公司
Aces Electronic Co.,Ltd.

檢驗尺寸標示
SYMBOLS INDICATE CLASSIFICATION DIMENSION
MARK IS CRITICAL DIM.
MARK IS MAJOR DIM.

品名(TITLE) 1.0mm WTB CONN. SMT R/A S/R TYPE

圖號(DWG.NO) 50441-XXXXX-XXX

製圖(DR) 10/12/08 gubin
審核(CHKD) SAM
核准(APPD) JASON

表面處理 (FINISH)
比例 (SCALE) 8:1
單位 (UNITS) mm
張數(SHEET) 1OF 1
SIZE A4
REV A