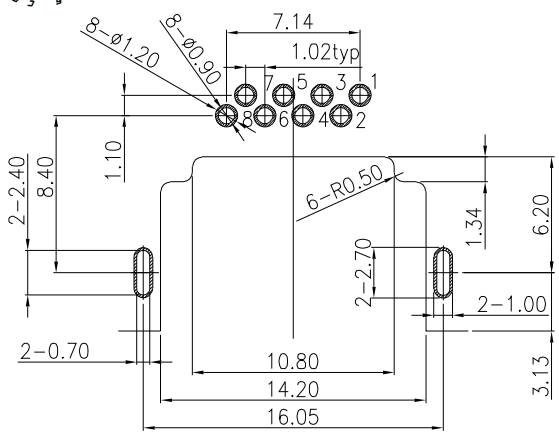

RECOMENDED PCB LAYOUT
TOLERANCE:±0.05mm
RECOMENDED PCB THICKNESS:1.20±0.05
TOP VIEW

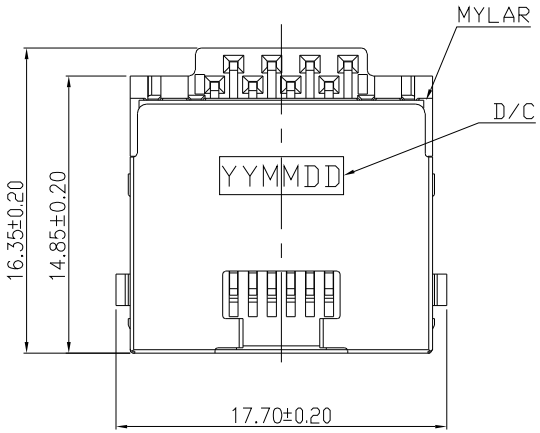

NOTES:
1. MATERIAL:
1.1 HOUSING: PA10T+35%GF(VICNYL R635NH); UL94V-0, COLOR: BLACK
1.2 TERMINAL: PHOSPHOR BRONZE(C5210R-EH); T=0.25mm
PLATING: GOLD PLATING ON CONTACT AREA, MATTE TIN 50u" MIN ON SOLDER TAIL, ALL OVER NICKEL 30u" MIN.
1.3 SHELL: SUS(201); T=0.20mm, 50u" NICKEL
1.4 STOPPLE: LCP(E6808); UL94V-0, COLOR: BLACK
1.5 DEFEND : LCP(E6808); UL94V-0, COLOR: BLACK
1.6 MYLAR: YELLOW
2.SPECIFICATIONS:
2.1 VOLTAGE RATING: 150VAC MAX.
2.2 CURRENT RATING: 1.5AMP MAX.
2.3 INSULATION RESISTANCE: 500MΩ MIN. AT 500V DC.
2.4 DIELECTRIC WITHSTANDING VOLTAGE: 500V AC 60HZ 1MINUTE.
2.5 DURABILIY: 5000 CYCLES.
2.6 OPERATING TEMPERATURE: -30°C TO+70°C.
2.7 FOR REFLOW SOLDERING LEAD-FREE PROCESS.

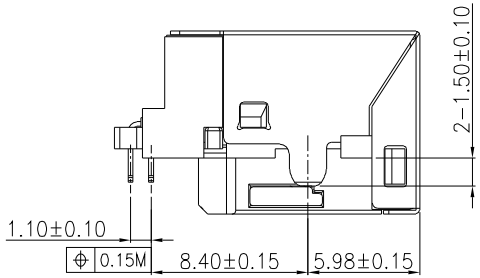

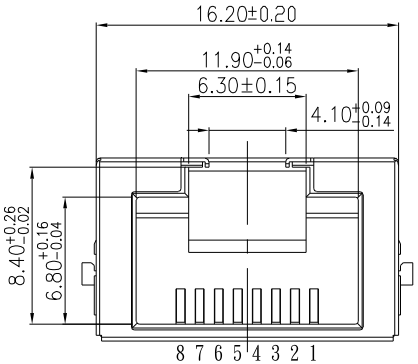

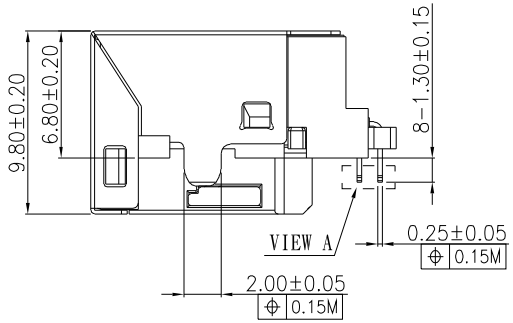

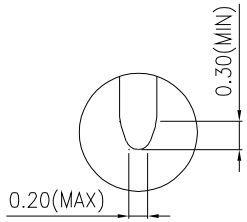

VIEW A
SCALE 5:1

P/N RULE CODE:
31522-H 00 00 X 68 R -001
H: HALOGEN FREE
LED CODE
00: W/O LED
CIRCUIT TYPE: 00
PLATING CODE:
1: GOLD FLASH
5: Au 30u"
MECHANICAL SERIES
68-PCB TO TOP=6.8mm
PACKING:
R: TAPE & REEL
001:NORMAL

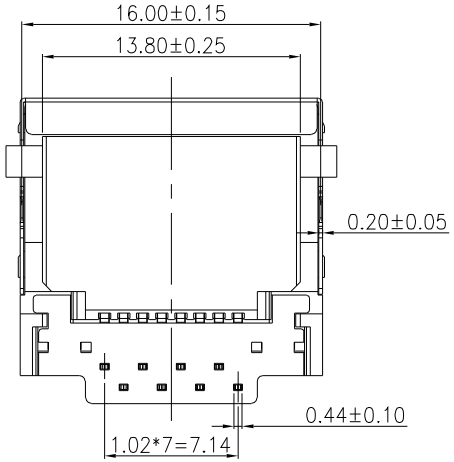

QUALITY SYMBOLS MAJOR CRITICAL	DRAWN BY DENG JIANXIANG DATE '180625	ACES ELECTRONICS	
GENERAL TOLERANCES (UNLESS SPECIFIED) X. ±0.5 .X ±0.30 .XX ±0.20 .XXX ±0.10 ANGLES ±1°	CHECKED BY TENG CHANG HO DATE '180625	TITLE RJ45 R/A W/O LED H6.8mm	
	APPROVED BY KUO JUNG HSUN DATE '180625		
	UNITS mm	SIZE A4	DWG NO. 31522-XXXXXXXXX-XXX
	SCALE 1:1 / SHEET NO. 1OF1	REV 1	PART NO. SEE NOTES