SPECIFICATION

宏 致 電 子 股 份 有 限 公 司

桃 園 縣 中 壢 市 東 園 路 13 號

No.13, Dongyuan Rd., Jhongli City,

Taoyuan County 320, Taiwan (R.O.C.)

TEL: +886-3-463-2808
FAX: +886-3-463-1800

SPEC. NO.: PS-88604-T0XX **REVISION:** F

PRODUCT NAME: 1.0mm Pitch WTB Crimping Terminal

PRODUCT NO: 88604 Series

PREPARED:	CHECKED:	APPROVED:
ZHUWEI	BEAVE	BRAVE
DATE: 2018.08.14	DATE: 2018.08.14	DATE: 2018.08.14

1. Revision History……..PAGE 3
2. SCOPE…..……PAGE 4
3. APPLICABLE DOCUMENTS……...PAGE 4
4. REQUIREMENTS……..PAGE 4
5. Performance……PAGE 5
6. PRODUCT QUALIFICATION AND TEST SEQUENCE……PAGE 8
7. Mating / Unmating Forces Tab……PAGE 9
8. Anatomy of a terminal……PAGE 10
9. Applicable Wires： UL1571 wire…….…… PAGE 10
10. Crimping Condition……..PAGE 11
11. Crimp Height Measurement……PAGE 12
12. Pull Force of Crimp Section Measurement……..PAGE 13
13. Standard Insulation Crimp..……..PAGE 13
14. Conductors Crimp Condition.……..PAGE 14
15. Crimping Requirements….……..PAGE 15

1 Revision History

Rev.	ECN #	Revision Description	Approved	Date
O	ECN-0810146	Released	JASON	2008/10/21
A	ECN-0811092	Modify Crimping Terminal Pull Strength	JASON	2008/11/14
B	ECN-08120723	Updated crimping condition	JASON	2008/12/26
C	ECN-0903077	Modify crimping height for 32#	JASON	2009/03/10
D	ECN-0908003	For English version	Jason	2009/08/01
E	ECN-1401237	ADD Working voltage	JASON	2014/01/13
F	ECN-1808274	Updated Salt Spray	ZHUWEI	2018/08/14

2 SCOPE

This specification covers performance, tests and quality requirements for 1.0mm pitch wire-to-board connector. These connectors are used to computer or other application. (Lead free product)
ACES P/N ： 88604 Series Crimping Terminal

3 APPLICABLE DOCUMENTS

EIA-364 ELECTRONICS INDUSTRIES ASSOCIATION

4 REQUIREMENTS

4.1 Design and Construction

Product shall be of design, construction and physical dimensions specified on applicable product drawing.

4.2 Materials and Finish

4.2.1 Crimping Terminal: High performance copper alloy (Phosphor Bronze)
Finish: (a) Area: Gold plated all over based on order information or 120u" MIN. tin over all.
(b) Under plate: Nickel-plated all over

4.3 Ratings

4.3.1 Working voltage less than 36 volts AC (per pin)
4.3.2 Voltage Rating: 50 Volts (AC(rms) /DC)
4.3.3 Current Rating:
AWG#32-0.8A (AC(rms) /DC)
AWG#34-0.8A (AC(rms) /DC)

4.3.4 Operating Temperature : -40℃ to +85℃

5 Performance

5.1. Test Requirements and Procedures Summary

Item	Requirement	Standard
Examination of Product	Product shall meet requirements of applicable product drawing and specification.	Visual, dimensional and functional per applicable quality inspection plan.
ELECTRICAL		
Item	**Requirement**	**Standard**
Low-signal Level Contact Resistance	20 m Ω Max.(initial) 40 m Ω Max. (After 30 times durability, mechanical and/ or environmental test)	Mate connectors, measure by dry circuit, 20mV Max., 10mA Max. (EIA-364-23)
Insulation Resistance	1000 M Ω Min.	Unmated connectors, apply 500 V DC between adjacent terminals. (EIA-364-21)
Dielectric Withstanding Voltage	500 VAC Min. at sea level for 1 minute. No discharge, flashover or breakdown. Current leakage: 1 mA max.	Test between adjacent contacts of unmated connectors. (EIA-364-20)
Temperature rise	30℃ Max. Change allowed	Mate connector: measure the temperature rise at rated current after:0.8 A/Power contact. The temperature rise above ambient shall not exceed 30℃ The ambient condition is still air at 25℃ (EIA-364-70 METHOD 2)
Durability	30 cycles.	The sample should be mounted in the tester and fully mated and unmated the number of cycles specified at the rate of 25.4 ± 3mm/min. (EIA-364-09)

MECHANICAL

Item	Requirement	Standard
Mating / Unmating Forces	Please see item7 Mating / Unmating Forces Tab	Operation Speed： 25.4 ± 3 mm/minute.. Measure the force required to mate/Unmate connector. (EIA-364-13)
Crimping Terminal Pull Strength of the housing(Receptacle)	0.4kgf Min.	Operation Speed： 25.4 ± 3 mm/minute. Measure the Terminal retention force with Tensile strength tester.
Crimping Terminal V.S Housing Insertion Force	0.5kgf Max	Operation Speed： 25.4 ± 3 mm/minute. Measure the Terminal Insertion force
Vibration	1 μs Max.	The electrical load condition shall be 100 mA maximum for all contacts. Subject to a simple harmonic motion having amplitude of 0.76mm (1.52mm maximum total excursion) in frequency between the limits of 10 and 55 Hz. The entire frequency range, from 10 to 55 Hz and return to 10 Hz, shall be traversed in approximately 1 minute. This motion shall be applied for 2 hours in each of three mutually perpendicular directions. (EIA-364-28 Condition I)
Shock (Mechanical)	1 μs Max.	Subject mated connectors to 50 G's (peak value) half-sine shock pulses of 11 milliseconds duration. Three shocks in each direction shall be applied along the three mutually perpendicular axes of the test specimen (18 shocks). The electrical load condition shall be 100mA maximum for all contacts. (EIA-364-27, test condition A)

ENVIRONMENTAL		
Item	**Requirement**	**Standard**
Thermal Shock	See Product Qualification and Test Sequence Group 4	Mate module and subject to follow condition for 5 cycles. 1 cycles: -40 +0/-3 ℃, 30 minutes +85 +3/-0 ℃, 30 minutes (EIA-364-32, test condition A)
Humidity	See Product Qualification and Test Sequence Group 4	Mated Connector 40℃, 90~95% RH, Refer to Method II. (EIA-364-31, Test condition A)
Temperature life	See Product Qualification and Test Sequence Group 5	Subject mated connectors to temperature life at 85℃ for 96 hours. Measure Signal. (EIA-364-17, Test condition III Method A)
Salt Spray (Only for gold plating)	See Product Qualification and Test Sequence Group 6	Subject mated/unmated connectors to 5% salt-solution concentration, 35℃. Under the condition that the electroplating layer on the metal surface is not destroyed. (I) Gold flash for 8 hours (II) Gold plating 3u" for 48 hours (III) Gold plating 5u" Min. for 96 hours (EIA-364-26,Test condition B)

Note. Flowing Mixed Gas shell be conduct by customer request.

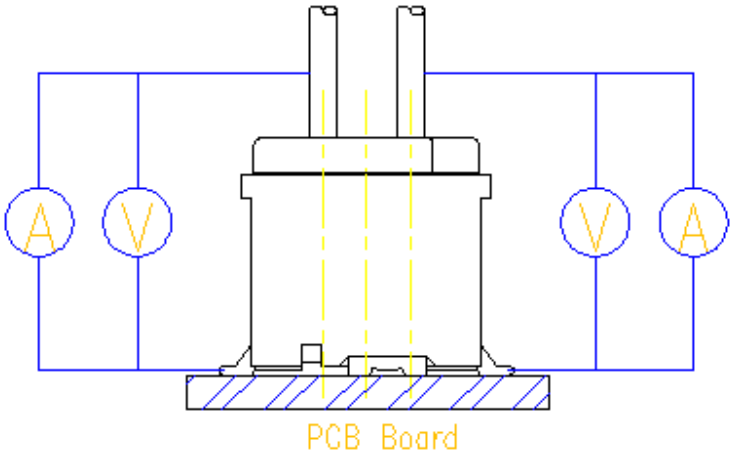

Contact Resistance Measuring Point

6 PRODUCT QUALIFICATION AND TEST SEQUENCE

	Test Group								
	1	2	3	4	5	6	7	8	9
	Test Sequence								
Examination of Product	1			1、7	1、6	1、4			
Low-signal Level Contact Resistance		1、5	1、4	2、10	2、9	2、5			
Insulation Resistance				3、9	3、8				
Dielectric Withstanding Voltage				4、8	4、7				
Temperature rise	2								
Mating / Unmating Forces		2、4							
Durability		3							
Vibration			2						
Shock (Mechanical)			3						
Thermal Shock				5					
Humidity				6					
Temperature life					5				
Salt Spray						3			
Crimping Terminal Pull Strength of the housing (Receptacle)							1		
Wire Crimping Strength									
Sample Size	2	4	4	4	4	4	4		

7 Mating / Unmating Forces Tab

NO. OF Ckt.	Initial		After 30th Cycle
	Insertion Force (Max.)	Withdrawal Force (Min.)	Withdrawal Force (Min)
6~10	1.8Kgf	0.4Kgf	0.35Kgf
12~20	2.6Kgf	0.5Kgf	0.45Kgf
22~30	3.4Kgf	0.6Kgf	0.55Kgf
32~40	4.2Kgf	0.7Kgf	0.65Kgf
42~50	5.0Kgf	0.8Kgf	0.75Kgf
52~60	5.8Kgf	0.9Kgf	0.85Kgf

8 Anatomy of a terminal：

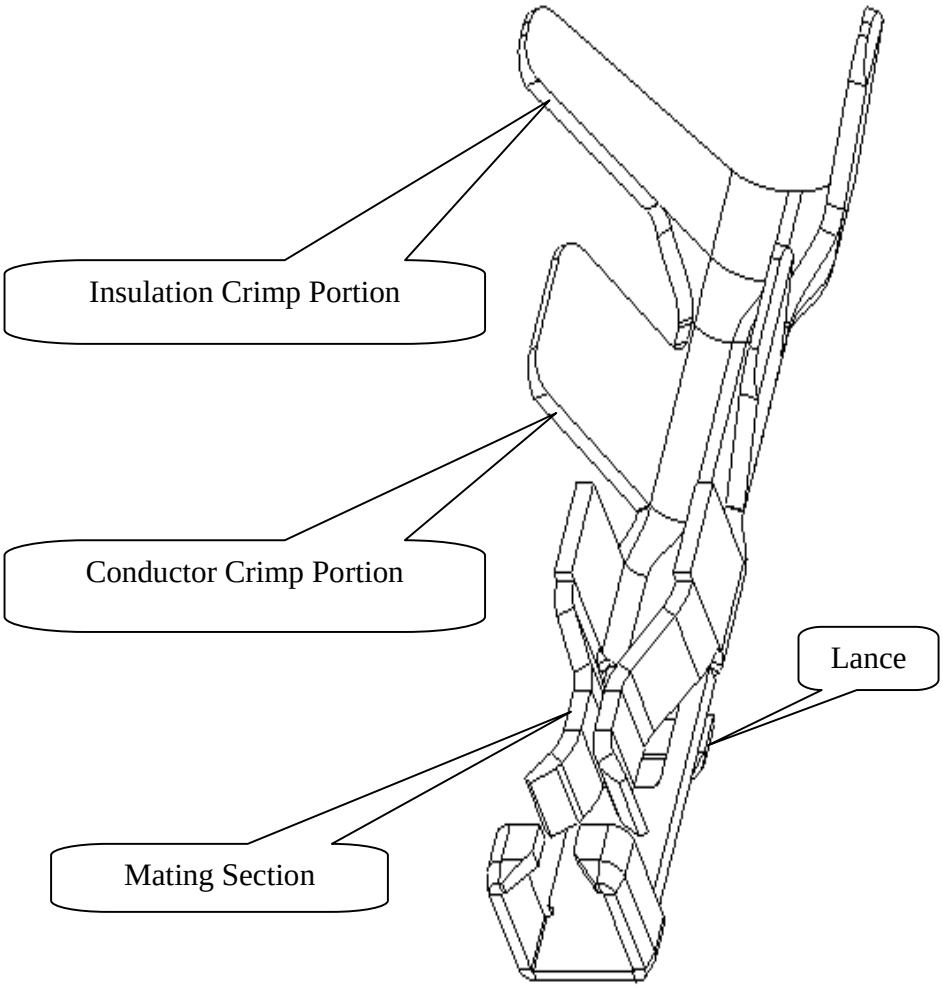

9 Applicable Wires：UL1571wire

AWG Size： AWG＃32~＃34
Insulation OD：Φ0.31~0.41mm

10 Crimping Condition：

CRIMPING CONDITION

Part number	Description	Applicable wire		
		AWG Size	Sec. area (m m²)	Insulation OD (mm)
88604Series	1.0mm crimping terminal			
	Wire	32~34	0.031~0.45	Φ0.31~Φ0.41

NO.	UL Style	Specification		Conductor crimping height (mm)	Insulator crimping height (mm)	Crimping retention force	Remarks
1	UL1571 Stranded wire	AWG Size	AWG32#	0.45~0.52	0.75±0.1	0.50KgfMIN	Tin plated annealed copper wire
		Construction	7C*Φ0.08mm				
		Sec. area	0.045m m²				
		Insulation OD	0.39+/-0.02mm				
2	UL1571 Stranded wire	AWG Size	AWG34#	0.34~0.38	0.64~0.67	0.40KgfMIN	Tin plated annealed copper wire
		Construction	7C*Φ0.065mm				
		Sec. area	0.031m m²				
		Insulation OD	0.32+/-0.01mm				

Note:

1、 W1(Conductor Crimping Width)：W1=0.78+/-0.03mm(Ref.)

2、 W2(Insulator Crimping Width)：W2=0.80+/-0.05mm (Ref.)

3、 A (conductor Crimping height)：Refer to table (Ref.)

4、 B(Insulator Crimping height)：Refer to table (Ref.)

5、 Strip Length：1.5~1.9mm(Ref.)

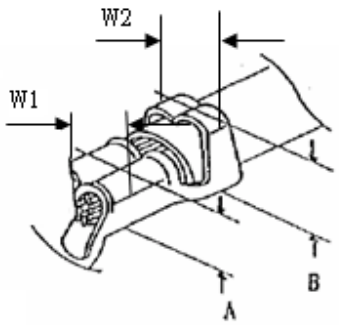

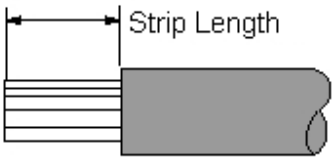

11 Crimp Height Measurement：

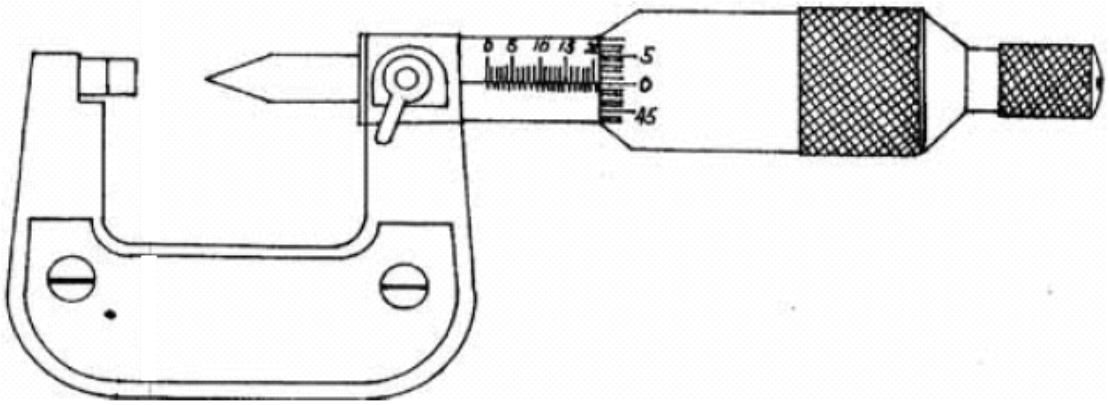

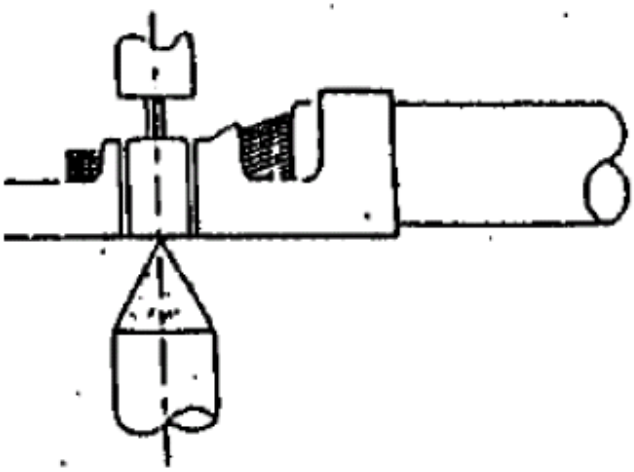

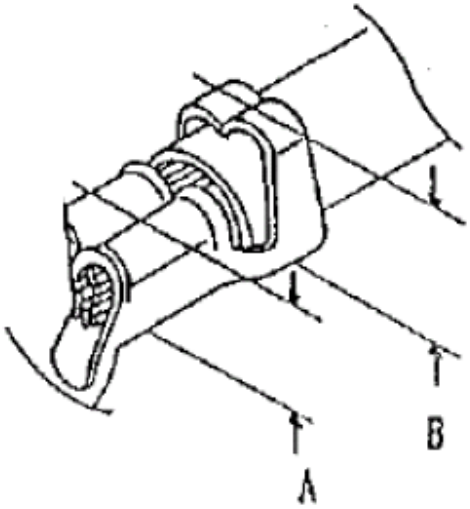

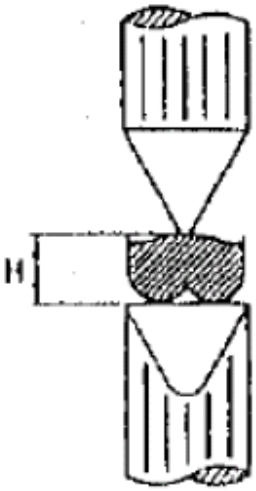

12 Pull Force of Crimp Section Measurement：

Before test samples, please measure crimp height and do not crimp insulation.

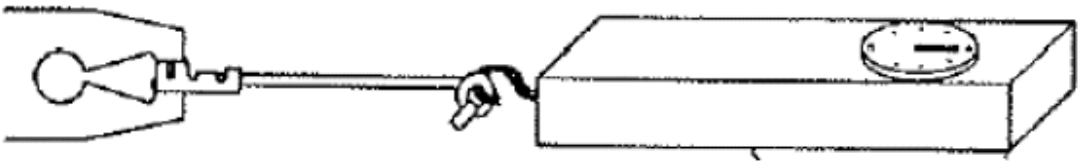

Pull Force of Crimp Section Measurement

13 Standard Insulation Crimp：

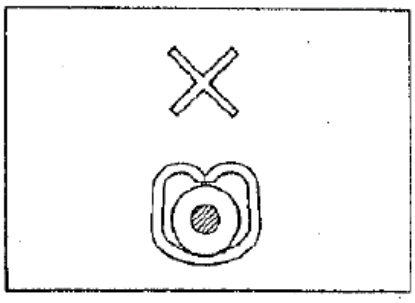

Not enough crimp

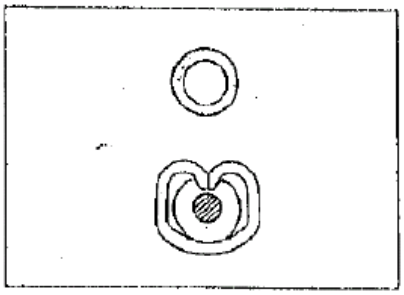

Good

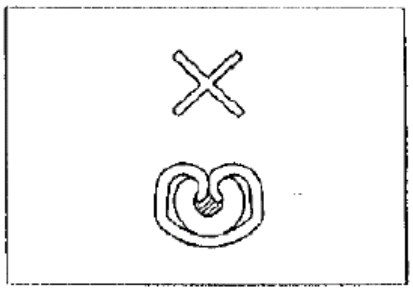

Crimp too much

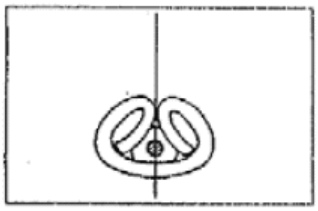

Good

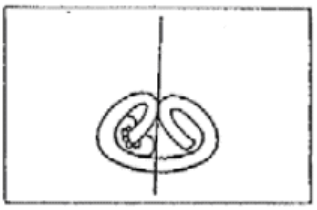

NG

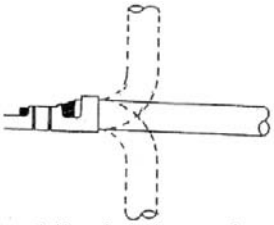

As following figure shown. It is no problem if wire bent up down 90 degrees 1 cycle and insulation position still in ideal position.

Insulation Crimp Condition

14 Conductors Crimp Condition：

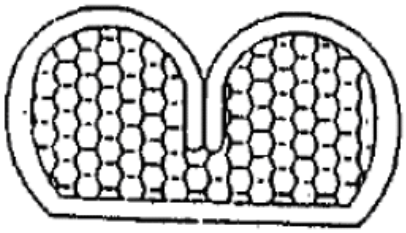

Good

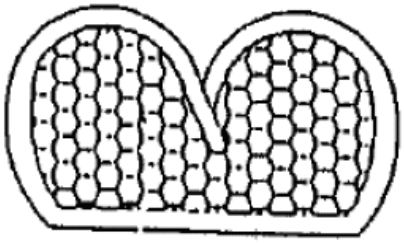

NG

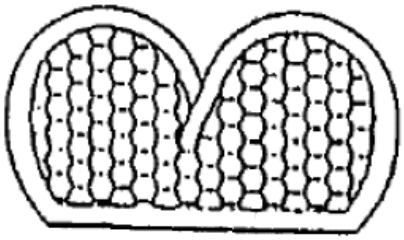

NG

Lower conduct retension force

Good

Large burr

NG

15 Crimping Requirements：

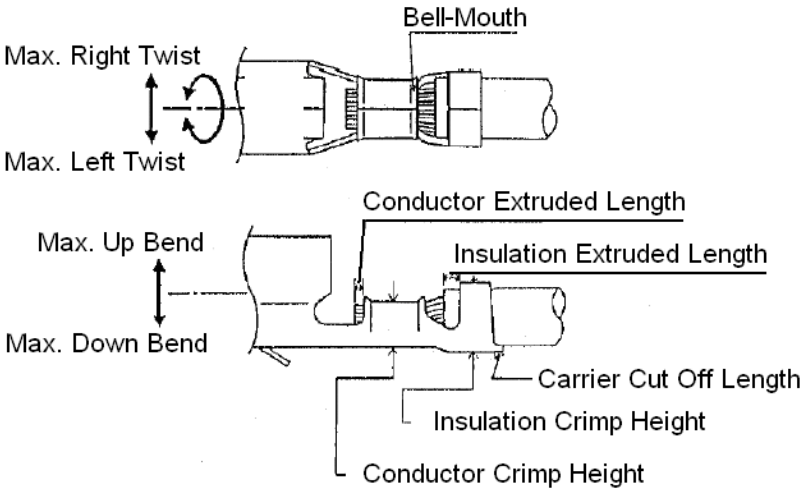

Item	Range (Ref.)
Max. Up Bend	6°
Max. Down Bend	6°
Max. Left Twist	5°
Max. Right Twist	5°
Bell-Mouth Length	0.1~0.3 mm
Carrier Cut Off Length	0~0.5 mm
Conductor Extruded Length	0.3~0.6 mm